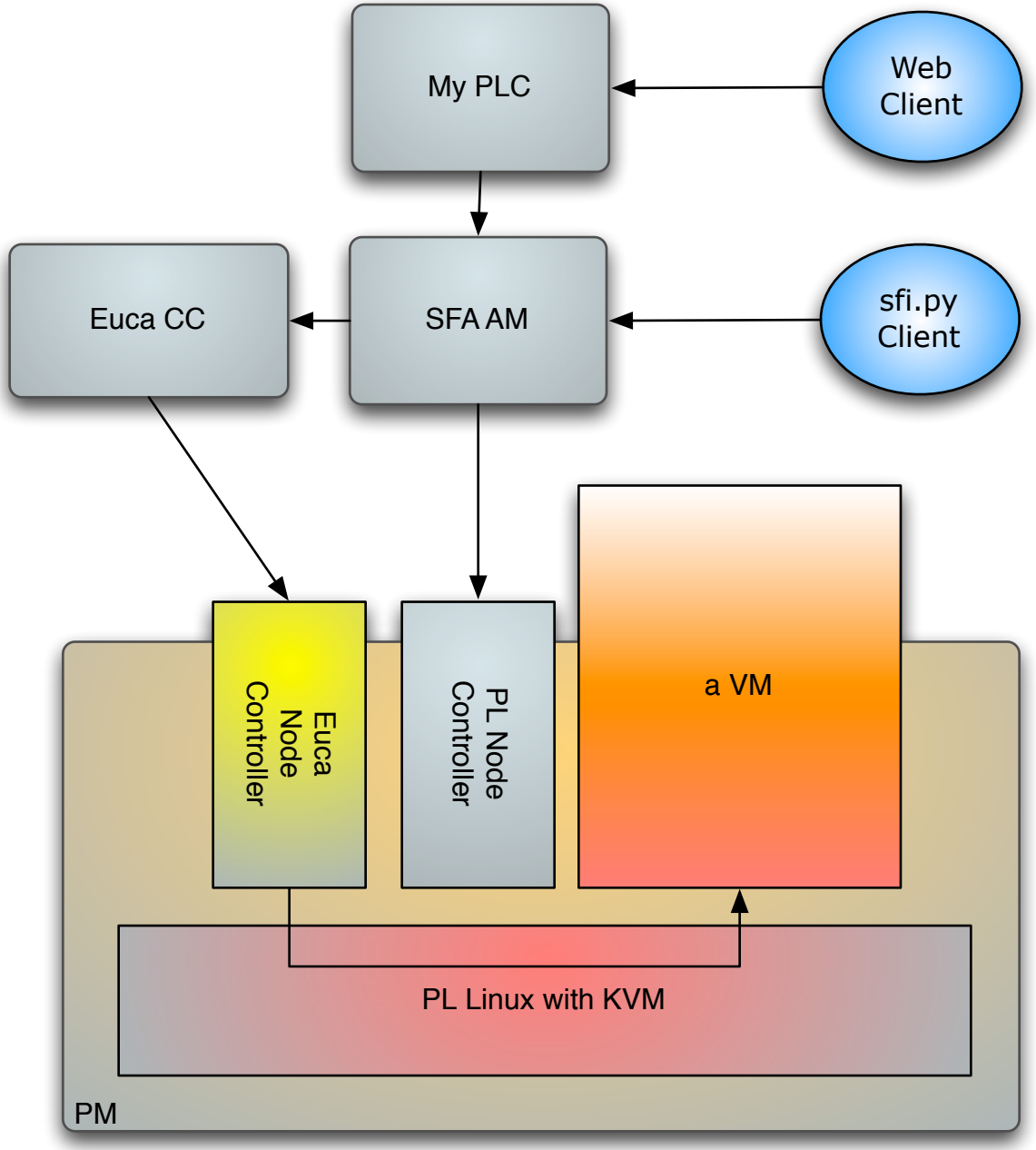
My PLC
Web Client
Euca CC
SFA AM
sfi.py Client
Euca Node Controller
PL Node Controller
a VM
PL Linux with KVM
PM